TOTO

TOILETS

NEOREST NX II

CS903KVJ

DESIGN AWARD 2018 | GOOD DESIGN GREEN GOOD DESIGN AWARD 2018 | reddot winner 2022

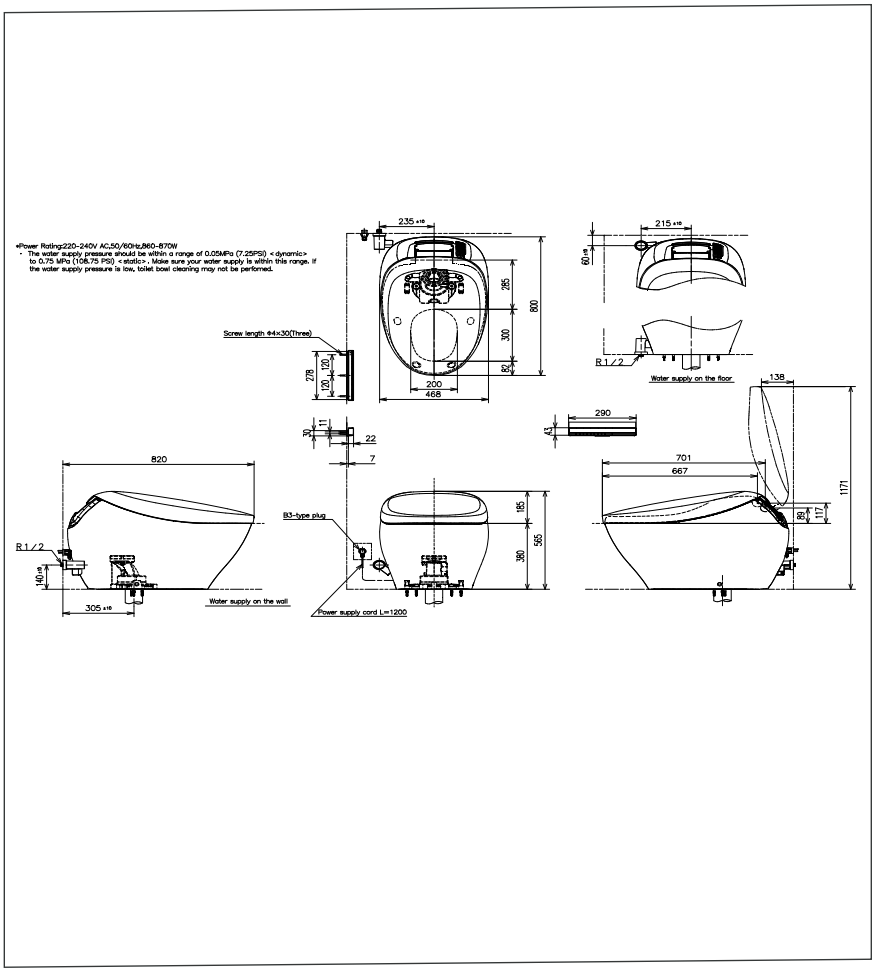

Features

- *Integrated appearance of luxury and streamlined cleanliness to create a elegant and seamless design*
- *Hybrid Ecology System*
  - WATER SAVING *dual flush 3.8 / 3L*
  - *Minimum required water pressure only at 0.05MPa (Dynamic)*
- HEATED SEAT *with temperature control*
- PREMIST *water is sprayed inside the toilet bowl to make it difficult for dirt to adhere*
- EWATER+ *automatically spreads out and keeps clean toilet bowl and nozzle by preventing bacteria with sanitizing effect*
- *Auto powerful* DEODORIZER *activates after every usage*
- *Auto Soft light function usable for night time usage*
- *Adjustable* WARM AIR DRYING
- *Automatically cleans the wand jet*
- AIR-IN WONDER WAVE *Cleansing provides comfort and eco-friendliness*

ACTILIGHT, cutting-edge technology. Photocatalytic glaze with UV light fired onto the bowl that breaks down microscopic waste pacticles

Specifications

Flush System	:	TORNADO
Water Use	:	*3.8L / 3L*
Rough-in	:	*305 mm*
Water Pressure	:	*0.05MPa~0.75MPa*
Power Rating	:	*220~240V , 50/60Hz , 860~870W*
Length of Power Cord	:	*1.2 m*
Size	:	*468W x 800D x 565H*

Parts description

- **CS903KVJ**
  Water Closet Bowl (S-Trap)
  (Rough-in 305)

Please consult a TOTO representative for details

TOTO (THAILAND) CO.,LTD
Bangkok Office : G Tower Grand Rama 9,12th Floor, South Wing, 9 Rama IX Road,Huaykwang Sub-district,Huaykwang District, Bangkok. 10310 Thailand
Tel : +(66)2-117-9520(AUTO) Fax : +(66)2-117-9527
th.toto.com

All rights reserved by TOTO company. Specifications and size are subject to change without notice.