TOTO | TOILETS

NEOREST AS

CES85510VJ

Features

- The gapless, full-cover design of the lid gives a sense of cleanliness, while the silhouette and separation lines between parts are precisely coordinated to give the space a sharper.
- The toilet seat adopts ergonomic circular arc design to ensure comfortable seating
- The function can be improved by one button, which is convenient for cleaning
- The new upgraded intelligent cleaning system brings a more comfortable and clean experience.

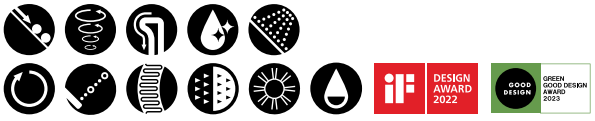

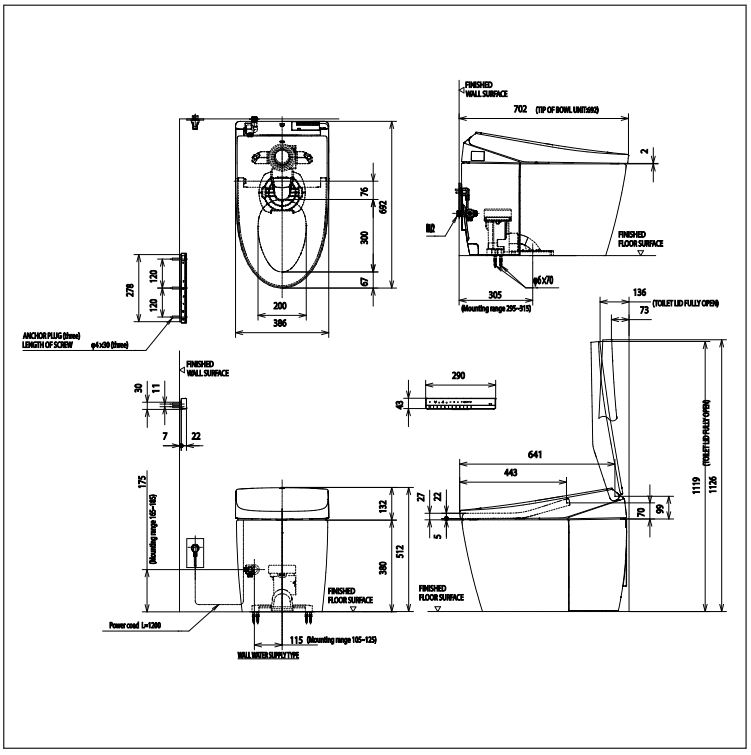

Specifications

Flush System	:	TORNADO HYBRID ECOLOGY SYSTEM
Water Use	:	3.0/3.8 L
Rough-in	:	305 mm
Water Pressure	:	0.05MPa~0.75MPa
Power Rating	:	826~1434W , 220V 50Hz
Length of Power Cord	:	1.2 m
Size	:	386W x 692D x 512H mm

Please consult a TOTO representative for details

TOTO (THAILAND) CO.,LTD
Bangkok Office : G Tower Grand Rama 9,12th Floor, South Wing, 9 Rama IX Road,Huaykwang Sub-district,Huaykwang District, Bangkok. 10310 Thailand
Tel : +(66)2-117-9520(AUTO) Fax : +(66)2-117-9527
th.toto.com

All rights reserved by TOTO company. Specifications and size are subject to change without notice.