TOTO

LAVATORY

LW316JW/F

"Cube" Console Lavatory

Product Features

Size : 655x500x105 mm
3 Tap Holes (Center 8")

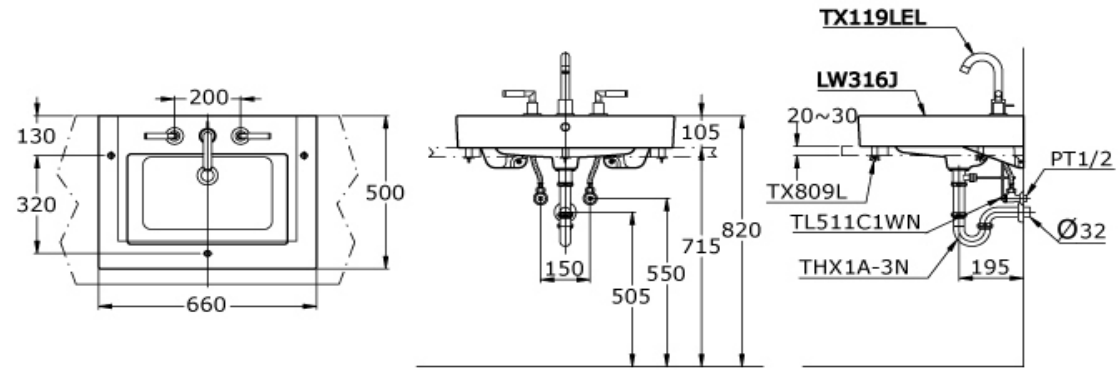

Suggestion Fittings & Parts

Remark : We reserve the right to change some parts for suitability.

TOTO (THAILAND) CO.,LTD

Bangkok Office : 598 Q House Ploenjit Building., G floor., Ploenchit Rd.,Lumpini, Pathumwan, Bangkok. 10330 Thailand
Tel : +(66)2-650-9925(AUTO) Fax : +(66)2-650-9923-4
www.toto.co.th