TOTO | ACCESSORIES

Backrest

EWC292#NW1

Specifications

Size : 230 x 448 mm.

Parts description

○ EWC292

Backrest (hard type)

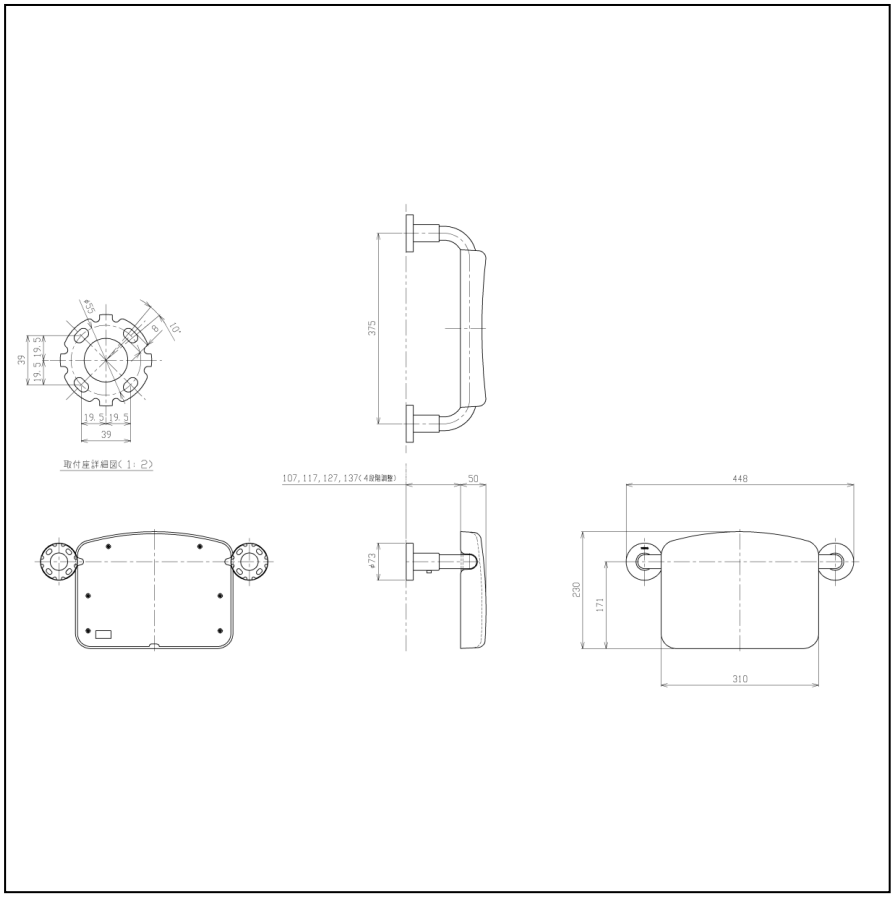

Please consult a TOTO representative for details

TOTO (THAILAND) CO.,LTD
Bangkok Office : G Tower Grand Rama 9,12th Floor, South Wing, 9 Rama IX Road,Huaykwang Sub-district,Huaykwang District, Bangkok. 10310 Thailand
Tel : +(66)2-117-9520(AUTO) Fax : +(66)2-117-9527
th.toto.com

All rights reserved by TOTO company. Specifications and size are subject to change without notice.