TOTO | ***FAUCET&SHOWER*** | ***DL208 - 1***

"Gloria" Faucet

Product Features

Gloria Series
8" Lavatory Faucet with Popup Waste
Ceramic Handle

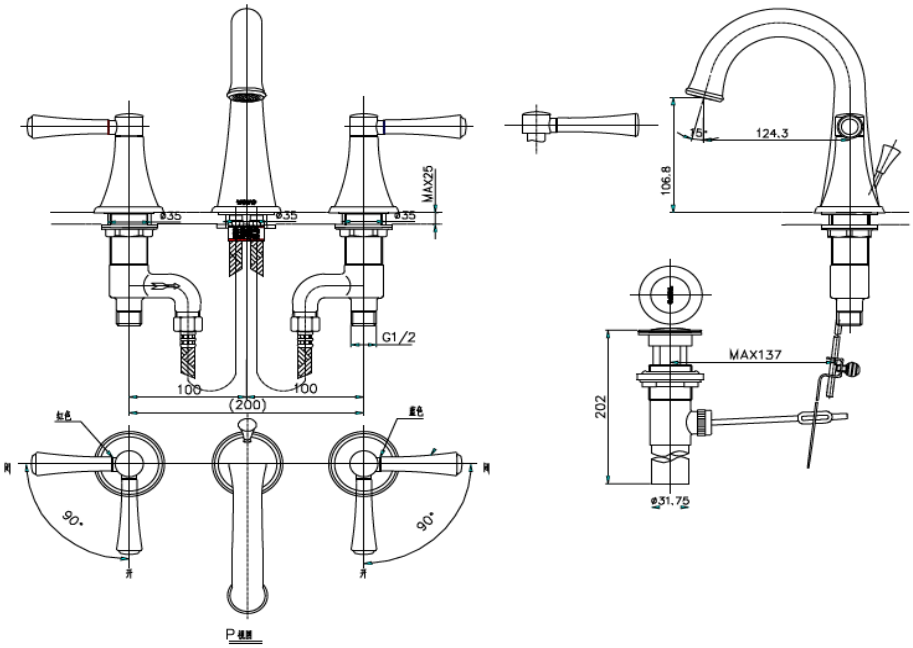

Suggestion Fittings & Parts

Remark : We reserve the right to change some parts for suitability.

TOTO (THAILAND) CO.,LTD

Bangkok Office : 598 Q House Ploenjit Building., G floor., Ploenchit Rd.,Lumpini, Pathumwan, Bangkok. 10330 Thailand
Tel : +(66)2-650-9925(AUTO) Fax : +(66)2-650-9923-4
www.toto.co.th