TOTO | ***FAUCET&SHOWER*** | ***TX496SRR***

"Rei R" Bath Filler & Shower Set

Product Features

3 Holes Bath & Shower Set

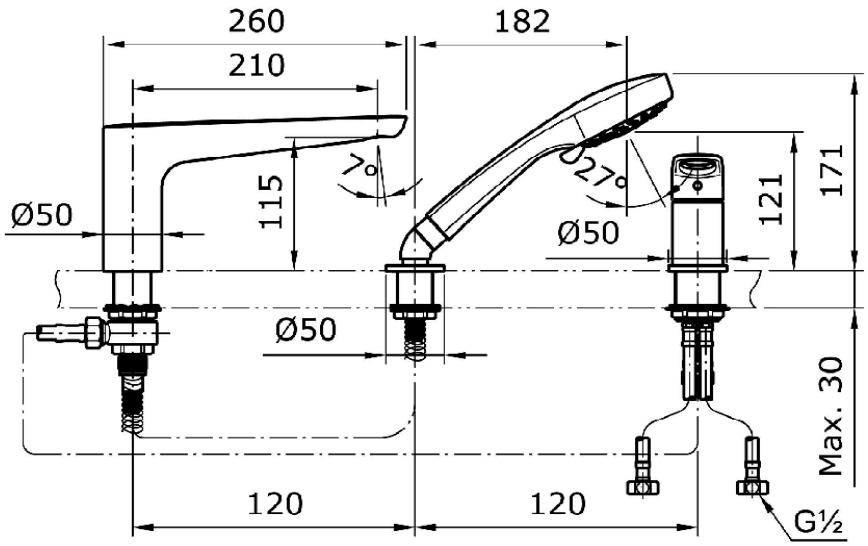

Suggestion Fittings & Parts

Remark : We reserve the right to change some parts for suitability.

TOTO (THAILAND) CO.,LTD

Bangkok Office : 598 Q House Ploenjit Building., G floor., Ploenchit Rd.,Lumpini, Pathumwan, Bangkok. 10330 Thailand
Tel : +(66)2-650-9925(AUTO) Fax : +(66)2-650-9923-4
www.toto.co.th