TOTO | FAUCETS

TBG02305T

GR Series
Bath filler (3-hole)

Features

- *Design Concept is gorgeous and regal*
- *Safety control with heat insulating handle*
- *1 mode function hand shower (Square Shape, Comfort Wave)*

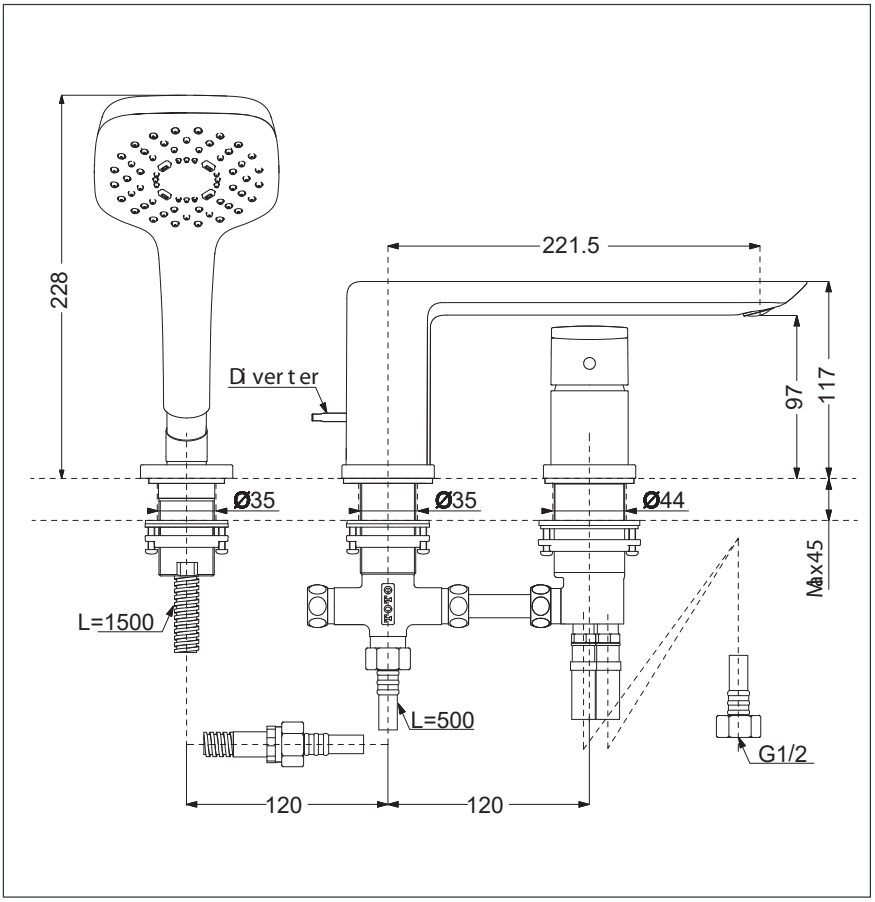

Specifications

Finish	*: Chrome*
Material	*: Brass (Faucet)* *Plastic (Hand Shower)*

Parts Description

- ***TBG02305T***
  Bath filler (3-hole)

Please consult a TOTO representative for details

TOTO (THAILAND) CO.,LTD
Bangkok Office : G Tower Grand Rama 9,12th Floor, South Wing, 9 Rama IX Road,Huaykwang Sub-district,Huaykwang District, Bangkok. 10310 Thailand
Tel : +(66)2-117-9520(AUTO) Fax : +(66)2-117-9527
th.toto.com

All rights reserved by TOTO company. Specifications and size are subject to change without notice.