TOTO

# LAVATORY

## LW908U/LW908F

*"Royal Elite" Pedestal Lavatory*

### Product Features

Size : 650x495 mm
**LW908U** *Standard : 1 Tap Hole
Made to Order : 3 Tap Holes (Center 8")

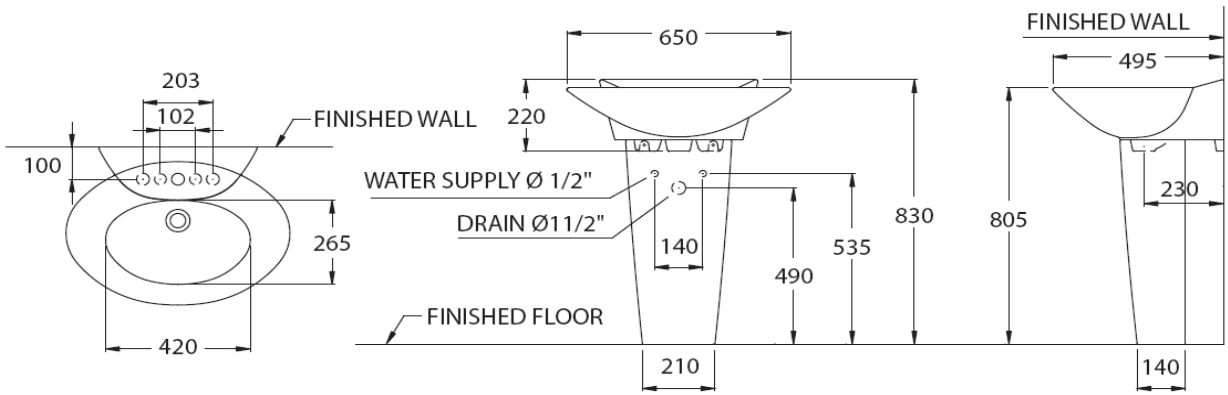


Suggestion Fittings & Parts

Remark : We reserve the right to change some parts for suitability.


**TOTO (THAILAND) CO.,LTD**

**Bangkok Office : 598 Q House Ploenjit Building., G floor., Ploenchit Rd.,Lumpini, Pathumwan, Bangkok. 10330 Thailand**
**Tel : +(66)2-650-9925(AUTO) Fax : +(66)2-650-9923-4**
**www.toto.co.th**