TOTO

LAVATORY

LW890JW/F/LW890HFJW/F

"Prominence" Pedestal Lavatory

Product Features

Half Pedestal Lavatory
Size : 680x510 mm
Standard : 1 Tap Hole

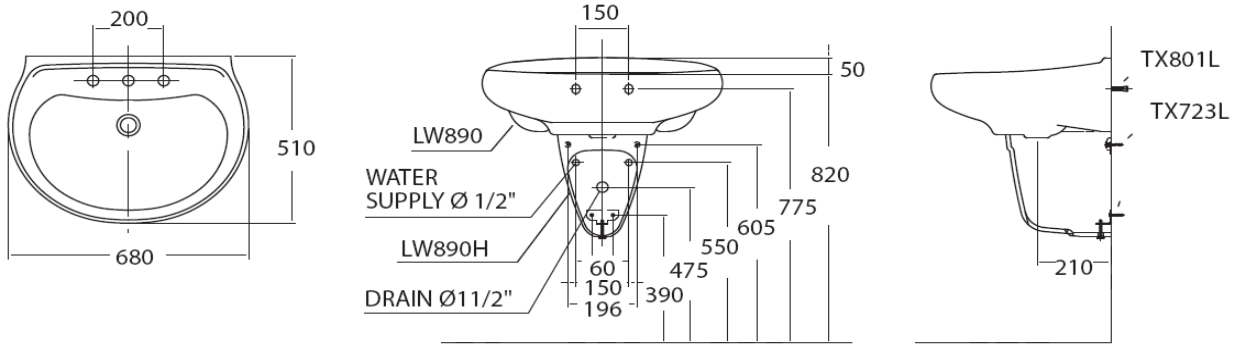

Suggestion Fittings & Parts

Remark : We reserve the right to change some parts for suitability.

TOTO (THAILAND) CO.,LTD

Bangkok Office : 598 Q House Ploenjit Building., G floor., Ploenchit Rd.,Lumpini, Pathumwan, Bangkok. 10330 Thailand
Tel : +(66)2-650-9925(AUTO) Fax : +(66)2-650-9923-4
www.toto.co.th