TOTO | TOILETS

NEOREST LS

CES87120VJ

Features

- The elegant corrugated top cover and space are mutually complementary, the decorative strips with metallic texture add charm under fusion, and the all-inclusive bae design is more luxurious
- The toilet seat adopts ergonomic circular arc design to ensure comfortable seating
- The function can be improved by one button, which is convenient for cleaning
- The new upgraded intelligent cleaning system brings a more comfortable and clean experience.

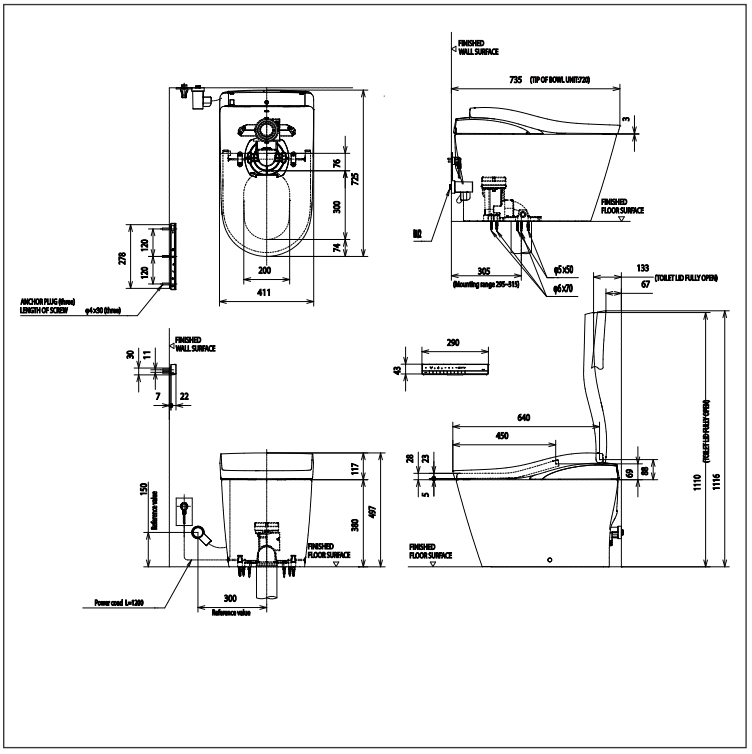

Specifications

Flush System	: TORNADO HYBRID ECOLOGY SYSTEM
Water Use	: 3.0/3.8 L
Rough-in	: 305 mm
Water Pressure	: 0.05MPa~0.75MPa
Power Rating	: 834~1448W , 220V 50Hz
Length of Power Cord	: 1.2 m
Size	: 411W x 725D x 497H mm

Colors

White and Silver

Please consult a TOTO representative for details

TOTO (THAILAND) CO.,LTD
Bangkok Office : G Tower Grand Rama 9,12th Floor, South Wing, 9 Rama IX Road,Huaykwang Sub-district,Huaykwang District, Bangkok. 10310 Thailand
Tel : +(66)2-117-9520(AUTO) Fax : +(66)2-117-9527
th.toto.com

All rights reserved by TOTO company. Specifications and size are subject to change without notice.