TOTO

TOILET

C450

Wall Hung Toilet (Back Inlet)

Product Features

- Beautiful Line with Clean Surface
- Easy Maintanance
- Popular in Public Restroom
- Quality Guarantee
- Back-inlet Type

Flush System : Siphon-Jet
Bowl Shape : Elongated
P-Trap : 150 mm
Flush Valve : TV150NRNV1
TSV406NL
TSV406NL(D)

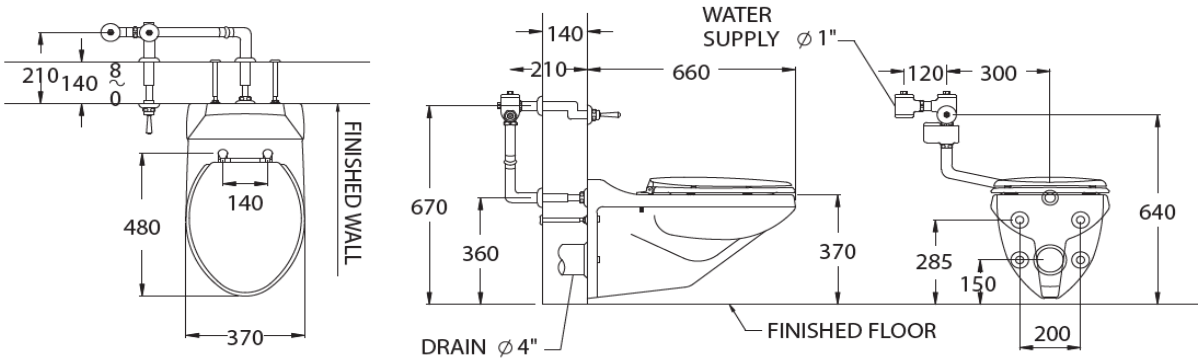

Suggestion Fittings & Parts

Remark : We reserve the right to change some parts for suitability.

TOTO (THAILAND) CO.,LTD

Bangkok Office : 598 Q House Ploenjit Building., G floor., Ploenchit Rd.,Lumpini, Pathumwan, Bangkok. 10330 Thailand
Tel : +(66)2-650-9925(AUTO) Fax : +(66)2-650-9923-4
www.toto.co.th